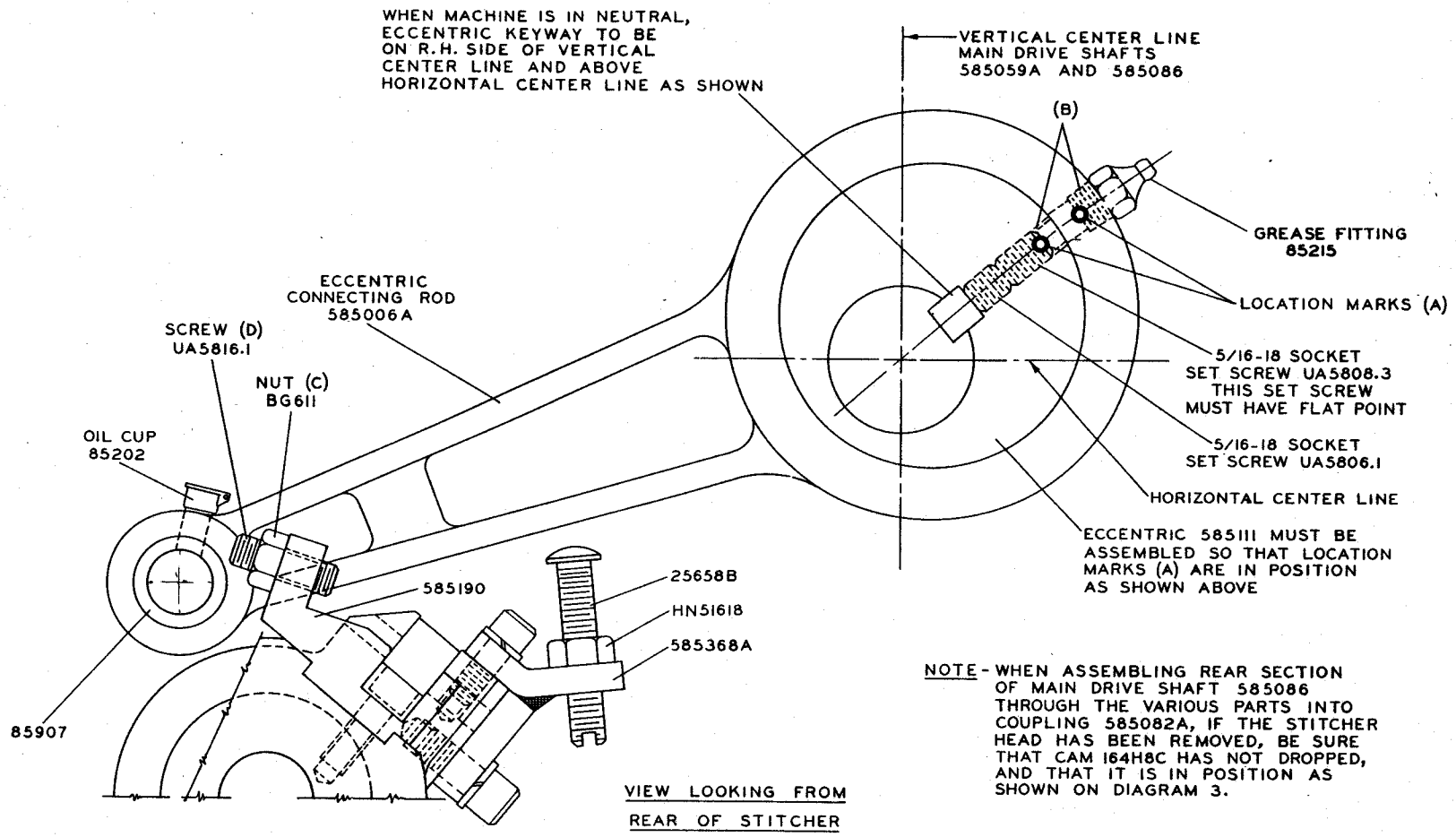

NOTE - WHEN ASSEMBLING REAR SECTION OF MAIN DRIVE SHAFT 585086 THROUGH THE VARIOUS PARTS INTO COUPLING 585082A, IF THE STITCHER HEAD HAS BEEN REMOVED, BE SURE THAT CAM 164H8C HAS NOT DROPPED, AND THAT IT IS IN POSITION AS SHOWN ON DIAGRAM 3.

DIAGRAM 5

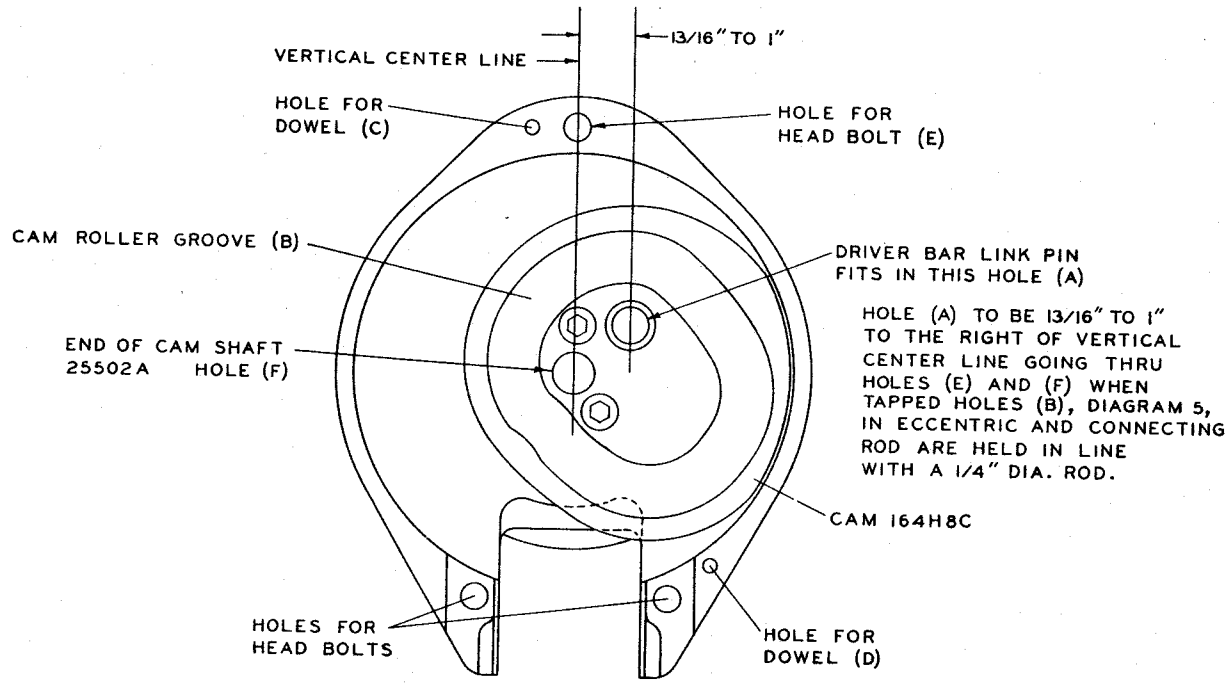
VERTICAL CENTER LINE
13/16" TO 1"
HOLE FOR DOWEL (C)
HOLE FOR HEAD BOLT (E)
CAM ROLLER GROOVE (B)
DRIVER BAR LINK PIN FITS IN THIS HOLE (A)
HOLE (A) TO BE 13/16" TO 1" TO THE RIGHT OF VERTICAL CENTER LINE GOING THRU HOLES (E) AND (F) WHEN TAPPED HOLES (B), DIAGRAM 5, IN ECCENTRIC AND CONNECTING ROD ARE HELD IN LINE WITH A 1/4" DIA. ROD.
END OF CAM SHAFT 25502A HOLE (F)
CAM 164H8C
HOLES FOR HEAD BOLTS
HOLE FOR DOWEL (D)

DIAGRAM 3